Technical Specification

Push Switch with interlock function

Switch: „ Working light “

Pneutron-Part No.: 11110430XX

Fendt No.: X830.240.357.000

Knob with symbol „Working light“ (Part No.:):	11316190XX
Knob Colour:	yellow (matt)
Symbol – Colour:	black
Illumination lamp:	12 V – 1,2 W

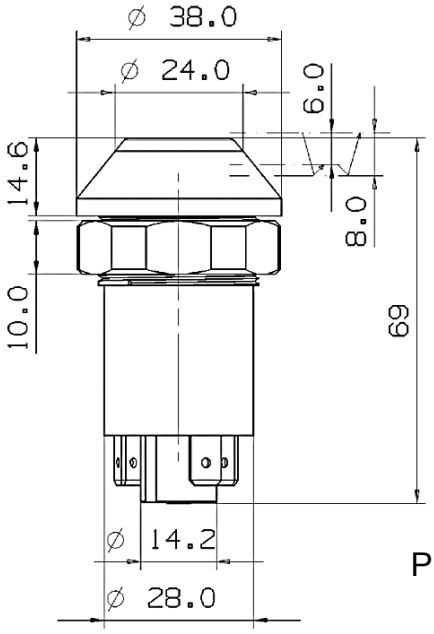

Connectors

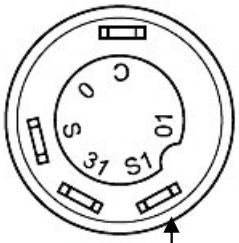

Pins 6,3 x 0,8

Circuit diagram

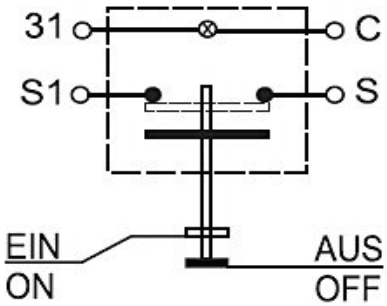

mit Arretierung
with locking